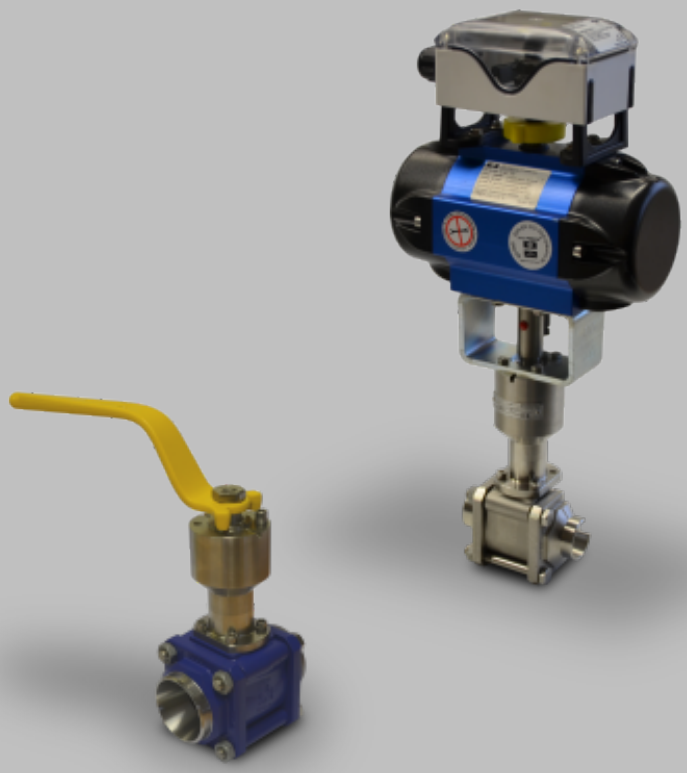

OPERATING INSTRUCTIONS FOR BALL VALVES

KV, KVP, KVE, KVplus, KVPplus, KVEplus

GEA Engineering for a better world.

GEA.com

Table of contents

1 Introduction 4

2 Intended use 4

2.1 General safety instructions 4

2.2 Special safety instructions 4

3 Transport and storage 5

4 Installation in the piping system 5

4.1 Notes on installation 5

4.2 Preparation 6

4.3 Ball valve design 7

4.4 Tightening torque 7

4.5 Nameplate 8

4.6 Installation in the pipeline 8

4.7 Welding procedures 9

5 General information 9

6 Disposal 10

1 Introduction

These instructions are intended to support the user of AWP ball valves during installation, operation and maintenance.
Non-observance of the safety instructions may result in hazards for the user or the operator. Non-observance can lead to the voiding of the manufacturer's warranty.

2 Intended use

AWP ball valves are exclusively intended for installation in piping systems or for mounting on vessels, pumps or distributors. The type of connection can be flanges, welding ends, threaded ends or special connections according to customer specifications. The AWP ball valves are to be used for shutting off media flows within the operating limits determined by the sealing material used. In the standard version, AWP ball valves must not be used for regulating media flows.
The pressure/temperature diagrams from the operating regulations or the catalogue must be observed.

- Valves whose permissible operating limits lie outside the operating conditions of the system must not be operated.
- The valves must be checked by the system operator before commissioning regarding their suitability for media compatibility.
- Disregard of the regulations can mean danger to life and limb, and/or cause damage in the piping system.

2.1 General safety instructions

All safety regulations that apply to the operation of a piping system, consisting of various individual components, also apply without restriction to the installed valves.
In the case of valves automated by the assembly of actuators, special safety instructions apply, which can be found in the documentation for the actuator assemblies.

2.2 Special safety instructions

⚠ DANGER

Danger from overpressure!

Danger to life due to work on a pressurised valve!

- ▶ Before loosening or unscrewing the body screws, the flange screws or the stem nut of the valve, ensure that the pressure on both sides of the valve is completely relieved. Only in this case is an uncontrolled escape of the medium prevented.

⚠ WARNING

Danger from escaping medium!

Risk of injury due to the pumped medium.

- ▶ When removing a valve from a piping system, medium can escape from both the pipeline and the valve itself. In particular, it must be noted that the ball bore may still be full of medium. This escapes during disassembly of the valve.
- ▶ Observe any additional safety regulations for handling hazardous, harmful or explosive media.

⚠ CAUTION

Danger from improper operation!

Injuries possible.

- ▶ Operate the valve exclusively with the operating pressure and operating temperature specified on the nameplate.
- ▶ Never exceed the operating limits specified on the nameplate. Exceeding the operating limits leads immediately to the voiding of the warranty.

3 Transport and storage

All valves must be carefully stored, packed and transported. The protective caps on the valve connections must only be removed shortly before installation of the valves into the piping system.
The valves must be stored in a dry and clean environment, if possible in closed rooms. Valves in oil- and grease-free versions are vacuum-sealed in bags. A warranty for the absence of oil and grease is only accepted if the packaging is closed and undamaged.

4 Installation in the piping system

In principle, the installation position is arbitrary for ball valves without an actuator and with a pneumatic actuator. Ball valves with an electric actuator cannot be installed upside down (actuator pointing downwards).

4.1 Notes on installation

⚠ WARNING

Risk of injury when operating the valve!

Crushing possible.

- ▶ Do not operate an automated valve with a ready-to-operate actuator outside a piping system.
- ▶ When mounting as an end-of-line valve, either provide the outlet with a screwed-on protective cover or dimension the length of the outlet connection so that it is not possible to reach into the valve.

NOTICE

For automated units, the actuator is already adjusted to the intended end positions.

- ▶ Do not change or remove the "OPEN" and "CLOSED" end stops.

NOTICE

- ▶ For automated units, select the closing times of the valve so that no pressure surges can occur in the entire piping system.
- ▶ Adapt supply or control lines to the actuator so that a closing time within the desired period is reliably ensured.

NOTICE

Improper operation!

Risk of property damage. Installation of third-party components leads to the voiding of the warranty.

- ▶ Only the supplied connecting and adapter parts are permitted for connecting the actuator and valve.
- ▶ All parts must be able to be pushed easily into the actuator and placed onto the valve stem.
- ▶ Maintain intended operation and do not use third-party components.

4.2 Preparation

It must be ensured that the valve corresponds to the requirements of the pipe class in terms of pressure and temperature class. Valves whose permitted pressure/temperature limits lie outside the operating conditions must not be installed in this piping system. The information on the areas of application can be found on the nameplate on the valve body.

1. Do not unpack valves until at the construction site and inspect them for completeness and transport damage. Damaged or incomplete valves must not be installed.
2. Remove protective caps.
3. **NOTICE! Use only the supplied parts and components! Body screws and other fastening parts must under no circumstances be exchanged for other components. The body screws are matched to the operating parameters of the valve in terms of dimensioning and material selection.**
4. Carry out a functional test before installation. Rectify recognisable functional malfunctions.
5. Check the counter-flanges in the pipeline for plane-parallelism and alignment.
6. Place the valve body centred between the installation flanges.
7. Before installation, clean the valve and the subsequent pipeline of contamination, in particular of hard foreign bodies (weld beads, slag residues etc.). **NOTICE! A test run with contaminated media leads immediately to damage to the valve's sealing system.**
8. Check pipelines for forgotten tools as well as screws, nuts etc.
9. Tighten body screws and flange screws with the prescribed torques.

4.3 Ball valve design

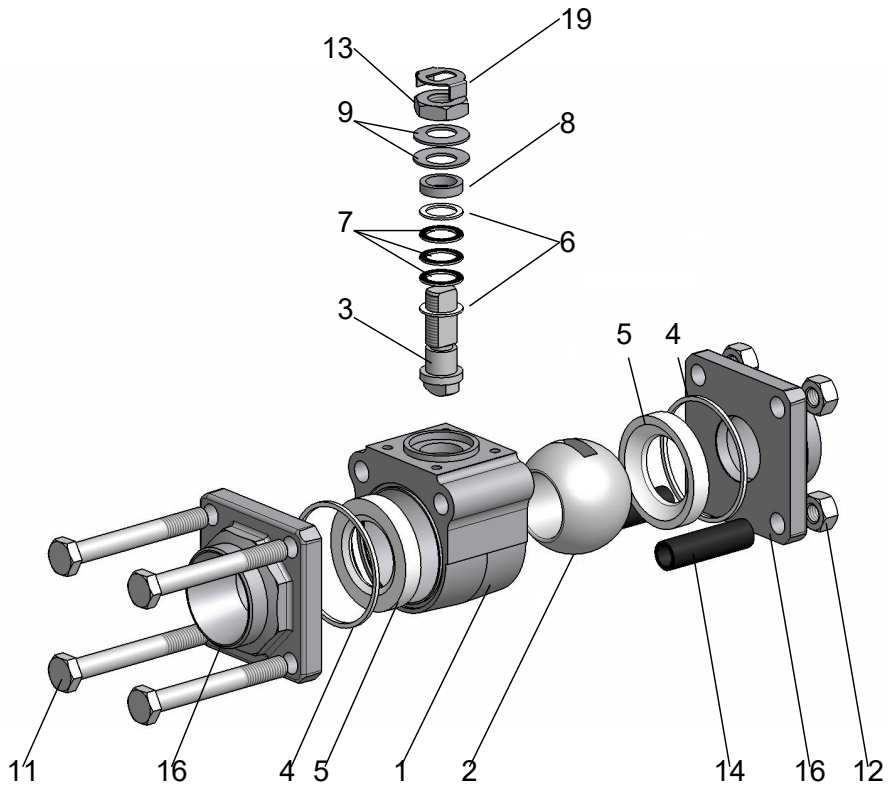

1	Body	2	Ball
3	Stem	4	Body gasket
5	Seat	6	Stem seal
7	Gland packing	8	Compression ring
9	Disc spring	11	Body screw
12	Body nut	13	Stem nut
14	Centring sleeve	16	Connection end
19	Locking washer		

The number of individual components in the stem seal can vary from nominal diameter to nominal diameter. The corresponding documentation enclosed with the goods must be observed.

4.4 Tightening torque

Body screws and body nuts

Ball valves reduced (standard) DN	Ball valves full (integral) DN	Thread	Torque Md [Nm]
10	8	M 6	12
15	10	M 6	12
20	15	M 8	16 - 17
25	20	M 8	16 - 17

Ball valves reduced (standard) DN	Ball valves full (integral) DN	Thread	Torque Md [Nm]
32	25	M 8	16 - 17
40	32	M 10	30 - 32
50	40	M 10	30 - 32
65	50	M 12	80 - 90
80	65	M 12	80 - 90
100	80	M 14	120 - 140
125	---	M 14	120 - 140
150	100	M 14	120 - 140
200	150	M 18	200 - 230
250	200	M 20	270 - 300

The body screws and nuts are tightened at the factory to the specified torques. These screw tightening torques apply to brand-new, undamaged threads.

Stem nuts (PTFE gland)

DN	15/20	25/32	40/50/65	65	80	100/150
default				Reinforced version		
DN integral	10/15	20/25	32/40/50	50 Reinforced version	65	80/100
Torque Md [Nm]	8	14	20	25	85	85

After tightening the stem nuts to the prescribed torque according to our installation and maintenance instructions, ensure the correct seating of the locking washers.

4.5 Nameplate

Marking is carried out in accordance with Pressure Equipment Directive 2014/68/EU by means of a nameplate.

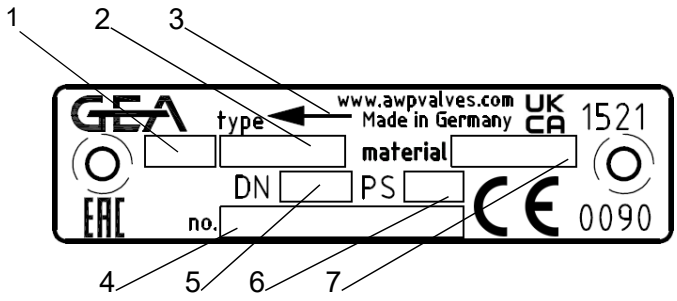

1 Type designation	2 Type no.
3 Flow direction	4 Serial number
5 Nominal size (DN)	6 Pressure rating (PS)
7 Material number	

The information on the nameplates may differ depending on the valve design. The traceability of the valve is ensured in all cases by the serial number.

4.6 Installation in the pipeline

Ball valves are tight-closing on both sides, with the exception of valves marked with a flow direction arrow on the body and on the top of the stem.

1. Remove packaging and protective caps. Inspect the valve for damage.
2. Ensure that the connection flanges, flange gaskets or welding end profiles are clean and undamaged.
3. Check whether the connection flanges are precisely aligned.
4. Spread the connection flanges for easier installation of the valve into the pipeline.
5. If the piping system contains contamination, clean it by flushing before installing the valve.
6. Install the valve in the pipeline and ensure sufficient accessibility for safe operation.
7. Tighten the flange connection screws in a crosswise pattern to the prescribed tightening torque **Tightening torque [▶ 7]**.
8. Before welding into the pipeline, move the ball valve to the "OPEN" position and remove the hand lever.
9. During the flushing process of the pipeline, partially open the valve to also flush the valve cavities.

4.7 Welding procedures

- **Ball valves with connections according to ISO, DIN 11850 & DIN 11866, Series A, B and C**
- After removing the protective caps, the ball valve is ready for welding. Valves with the above-mentioned connections can be welded into the piping system in the "OPEN" position without disassembly. Welding must be carried out according to the technical rules and procedures (TIG). After the valves have cooled down, the body screws must be tightened with the specified tightening torques **Tightening torque [▶ 7]**. **NOTICE! Ball valves with a vent hole on the upstream side must be installed taking the flow direction into account.**Check the stem nut for the prescribed tightening torque **Tightening torque [▶ 7]** and retighten with the specified values if necessary.
- **Ball valves with connections according to DIN or Schedule**
- After removing the protective caps, the ball valve is ready for welding. Valves with end connections according to DIN or Schedule dimensions must be disassembled before welding. The centre section must be removed before welding. After the weld seams have cooled, reassemble the centre section between the welding flanges and tighten the body screws to the specified tightening torques **Tightening torque [▶ 7]**. **NOTICE! Ball valves with a vent hole on the upstream side must be installed taking the flow direction into account.**Check the stem nut for the prescribed tightening torque **Tightening torque [▶ 7]** and retighten with the specified values if necessary.
- **Ball valves with connections according to socket weld design**
- After removing the protective caps, the ball valve is ready for welding. Valves with connections in socket weld design can be welded into the piping system in the "OPEN" position without disassembly. Welding must be carried out according to the technical rules and procedures (TIG). After the valves have cooled down, the body screws must be tightened with the specified tightening torques **Tightening torque [▶ 7]**. **NOTICE! Ball valves with a vent hole on the upstream side must be installed taking the flow direction into account.**Check the stem nut for the prescribed tightening torque **Tightening torque [▶ 7]** and retighten with the specified values if necessary.
- **Fire-safe valves and valves in fire-safe design**
- The valves can be welded without disassembly, observing general welding procedures. When disassembling the valves, the graphite body gaskets are destroyed and must be replaced. **NOTICE! Do not disassemble fire-safe valves or valves in fire-safe design!**

5 General information

Storage and protective measures

Packed ball valves must be stored in clean and dry rooms. The ball valves are delivered with protective caps on the connections. The protective caps must only be removed immediately before installing the valves into the pipeline. No foreign bodies etc. must remain inside the ball valve.

Operation and maintenance

- The ball valves close clockwise. Part-turn actuators optionally mounted on the ball valves are set to their end positions at the factory and must not be adjusted.**NOTICE! For ball valves with actuators, lubrication of the stem extension with low-temperature grease (e.g. WINIX® 5700) every 6 months after commissioning is mandatory to ensure the tightness of the unit.**
- The stem extension is required regardless of operation for use in the range colder than -10°C to avoid a leak in the stem. Greasing is necessary in any case if an extension is used. The low-temperature grease can be filled via the grease nipple.
- In normal operation, no further checks or maintenance work are necessary with regard to trouble-free tightness and operation of the valve. Regular visual inspection of the valves as part of inspection work should be carried out to detect any leaks in good time.
- In the event of signs of leaks at the valve, the pipeline must first be depressurised, then corresponding repair work must be carried out in accordance with the manufacturer's guidelines and the maintenance instructions.
- The AWP stem sealing systems are self-adjusting and maintenance-free. Leaks at the stem packings can be eliminated by retightening the gland packing using the stem nut. In the long term, after a leak has occurred at the stem, the gland packing and the stem seal must be replaced.
- **NOTICE! Only the use of ORIGINAL spare parts is permitted. The installation of replacement seals or spare parts from third-party manufacturers leads to the immediate voiding of the warranty. Please refer to the product information for detailed information.**
- When requesting or ordering spare parts, please provide the data specified on the nameplate.

Contact
GEA AWP GmbH
Armaturenstr. 2
17291 Prenzlau
Tel.: +49 3985 8559-0
Fax: +49 3984 8559-13
info@awpvalves.com

6 Disposal

Dismantle the valves for disposal. Collect lubricants during dismantling. The valve materials must be separated from one another and disposed of in accordance with local regulations.

GEA AWP GmbH
Armaturenstr. 2
17291 Prenzlau
Germany
phone: +49 3984 8559-0
fax: +49 3984 8559-18
e-mail: info@awpvalves.com

Latest revision: 20.11.2026
©All rights reserved. Subject to modifications. Printed in Germany.