

OPERATING INSTRUCTIONS FOR BUTTERFLY VALVES

AK, AKP, AKE, AKplus, AKPplus, AKEplus

GEA Engineering for a better world.

GEA.com

Table of contents

1 General **4**

2 Safety **4**

2.1 Intended use 4

2.2 Meaning of symbols 5

2.3 Potential hazards 5

2.4 Sources of danger 5

3 Butterfly valve design **6**

4 Installation **7**

4.1 Transport and storage before installation 7

4.1.1 Transport 7

4.1.2 Storage 7

4.1.3 Handling before installation 7

4.2 Installation in the pipeline 7

5 Maintenance and repair **8**

5.1 Changing the seat ring 9

5.2 Changing the gland packing 9

5.3 Cause and rectification of functional malfunctions 9

6 Marking **9**

7 Decommissioning **10**

8 Disposal **10**

9 Contact **10**

1 General

These installation and maintenance instructions contain information required for safety, correct installation and connection to the pipeline. Should any difficulties arise during installation or operation that cannot be resolved with the aid of these installation and maintenance instructions, contact the supplier or manufacturer for further information. These installation and maintenance instructions are in accordance with EN safety standards. When installing the valve, the operating personnel or the person responsible for carrying out the installation must ensure that the applicable national regulations are observed. The manufacturer reserves the right to make technical changes and further developments at any time. We recommend that personnel tasked with maintenance, installation and operation are made familiar with these instructions, which are also accessible on the internet at **www.awpvalves.com**.

2 Safety

2.1 Intended use

Area of application

AWP butterfly valves are used for shutting off, throttling and regulating liquid and gaseous media as well as pasty and powdery products in pipelines, on vessels, apparatus, etc. The area of application of the valve is the responsibility of the system designer/operator. The special properties of the valve must be taken into account. The construction parts in contact with the medium are available in a wide selection of materials. This makes it possible to provide the most suitable material combination for optimal adaptation to your specific application. Contact the manufacturer if the valve is to be used in media that require special materials or exclude certain materials.

Method of operation

The butterfly valve is opened or closed by turning the valve stem. The swivel angle of the valve disc is 90°.

Technical data

Pressure range	See pressure/temperature diagram
Temp. range	See pressure/temperature diagram
Nominal diameter range	DN 50 - DN 500
Test pressure	1.5 x PN

DN / INCH	PN	-50	-29	-10	+50	+150	TS [°C]
DN 50...350 2"...14"	PN25	18.7	25	25	25	21	PS [bar]

NOTICE

Note A

PN 40 only for liquids and not suitable for hazardous media such as explosive, highly flammable, toxic or oxidising media.

Restrictions on use

The construction parts in contact with the medium must be classified as resistant to the products to be pumped. Inform yourself in the corresponding literature or contact the manufacturer or supplier.

Prohibition of modifications to the valve

Mechanical modifications to the butterfly valve or the use of spare parts from other manufacturers for repair purposes is prohibited. **NOTICE! Disregard of this requirement means that safety is no longer guaranteed. Repair work on the butterfly valve must only be carried out by personnel trained by the manufacturer.**

Warning against foreseeable misuse

NOTICE! Valves and their accessories (e.g. operating elements) must not be misused as a stepladder to reach higher system components.

Obligation to comply with operating, maintenance and servicing regulations

These instructions are part of the scope of delivery and must be kept clean and made accessible to the user.

2.2 Meaning of symbols



This symbol indicates a danger.

2.3 Potential hazards

General potential hazards arise from:

- Non-observance of these instructions
- Improper use of the valve
- Insufficiently qualified personnel

2.4 Sources of danger

Mechanical

Sufficient freedom of movement for the hands must be ensured for operating the hand lever to the end positions, so that there is no risk of injury. Excessive oscillations and vibrations must be avoided to prevent the loosening of screw connections.

Electrical

See the corresponding installation and operating instructions from the manufacturer of the electric actuator.

Thermal

In the operating temperature range between -50°C and +400°C, body surface temperatures from -20°C to over +400°C can occur. Suitable precautions must be taken to protect against burns due to low or high temperatures. For example, insulated gloves must be worn when operating the hand lever.

3 Butterfly valve design

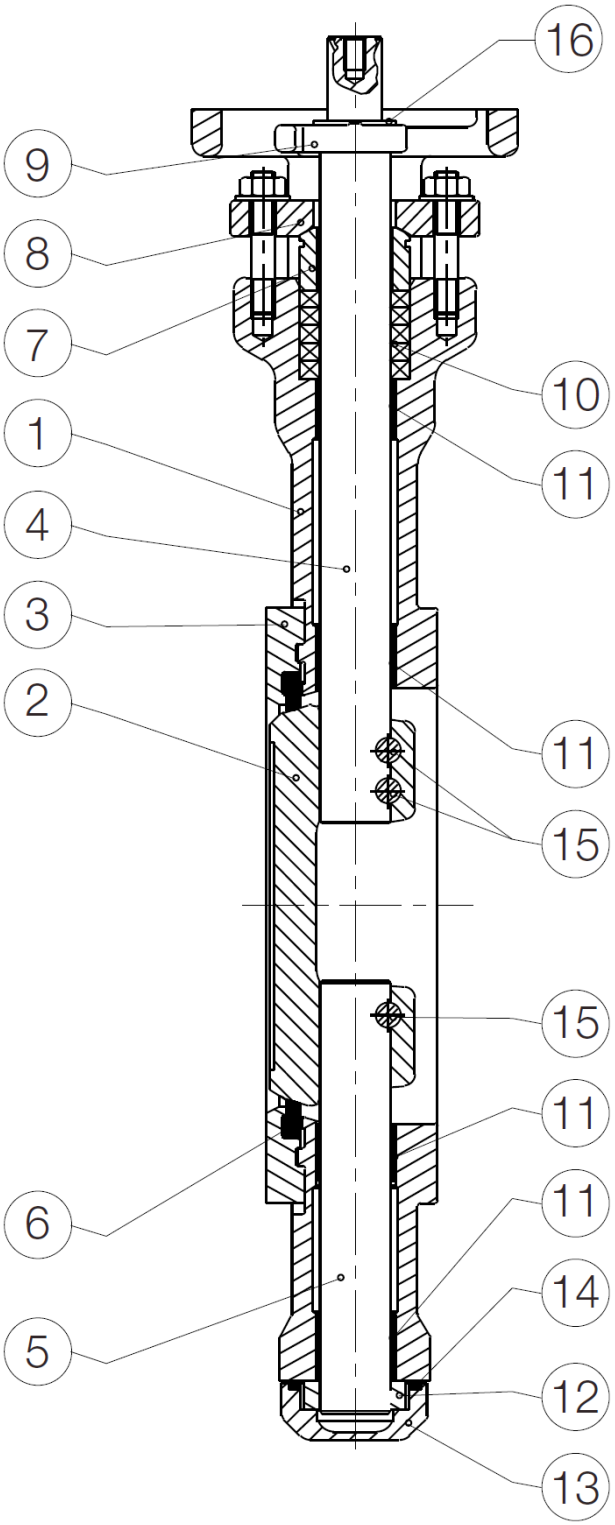

Position	Quantity	Designation
1	1	Body
2	1	Valve disc
3	1	Seat retaining ring
4	1	Upper valve stem
5	1	Lower valve stem

6	1	Seat ring
7	1	Guide ring
8	1	Gland follower
9	1	Blow-out protection
10	3 / 4 / 5	Packing (DN-dependent)
11	4	Stem bearing
12	1	Support ring
13	1	Body cover
14	1	Body cover gasket
15	2 / 3	Taper pin (DN-dependent)
16	1	Retaining ring / stud screw

4 Installation

4.1 Transport and storage before installation

The butterfly valve is delivered with protective caps on the inlet openings. Do not remove the caps until immediately before installing the valve.

4.1.1 Transport

Transport temperature: -20 °C to +65 °C
Protect the valve from external influences (impact, shock, vibrations).

4.1.2 Storage

Storage temperature: -20 °C to +65 °C, dry and dust-free
When stored in damp areas, a desiccant or heating is required to protect against condensation. The valve disc must always be in the closed position.

4.1.3 Handling before installation

- Do not remove the protective caps until immediately before installing the valve
- Protect the valve from weather influences such as moisture (or otherwise use a desiccant).
- Careful handling prevents damage.

4.2 Installation in the pipeline

In principle, the installation position is arbitrary for butterfly valves without an actuator or with a pneumatic actuator. Butterfly valves with an electric actuator, however, cannot be installed inverted (actuator pointing downwards).
The **recommended installation position** is with a horizontal valve stem, with the lower half of the valve disc opening in the direction of flow. Do not use the butterfly valve to spread the connection flanges, which would lead to damage to the seat ring and the seat. To prevent damage to these construction parts, the protective caps on the butterfly valve should only be removed immediately before installation. Do not use the butterfly valve to align poorly laid pipelines in new systems. Weld beads occurring during spot welding can damage the seat ring if the butterfly valve is installed. Use spacers instead. The final welding of the pipeline flanges with the valve already installed leads to serious damage to the seat ring due to the high temperatures generated. Always

insert all flange connection screws, even in systems with low pressure. The valve should never be pressurised as long as even one flange connection screw is missing. The dimensions of the counter-flanges must correspond with the dimensions specified in the following table.

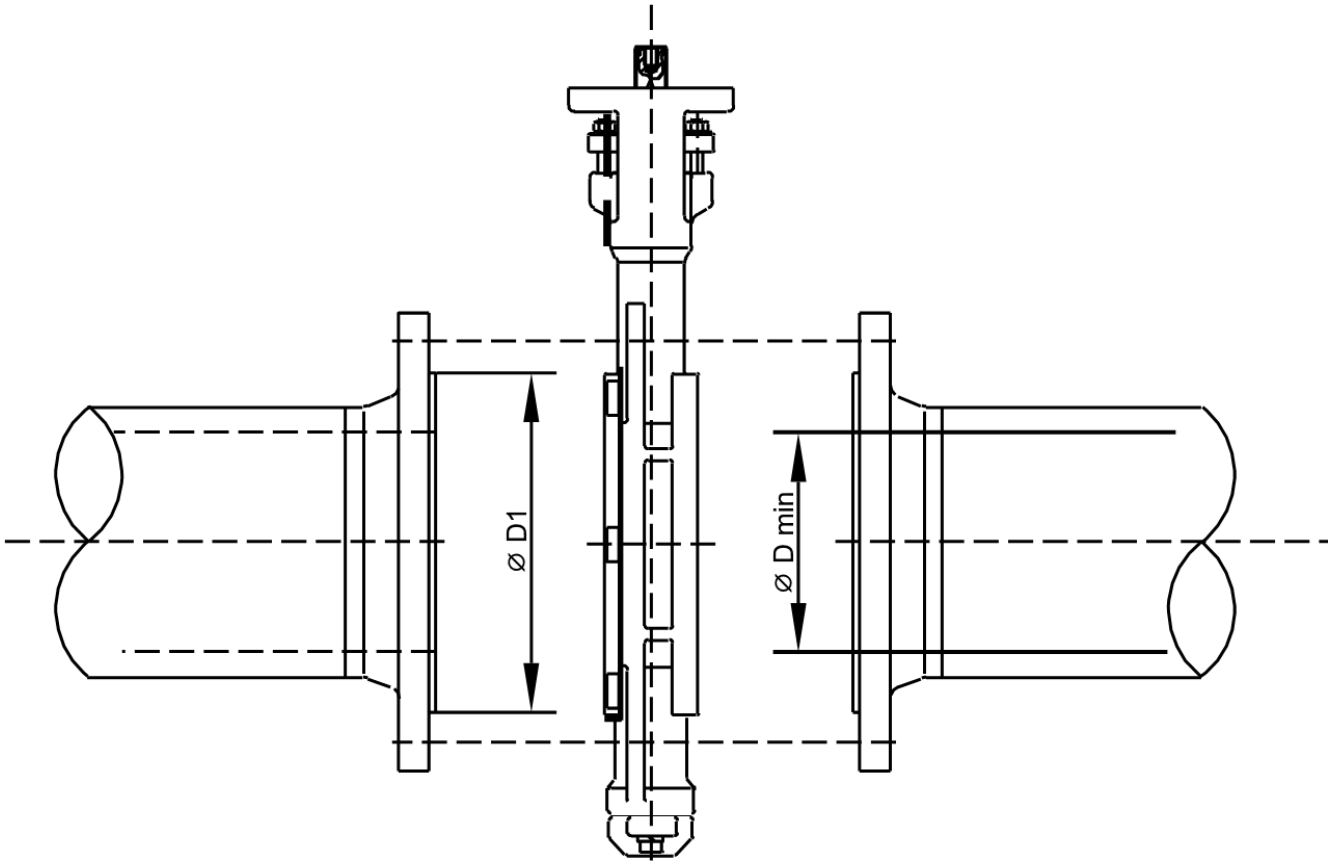

DN	50	65	80	100	125	150	200	250	300	350	400	450	500
Ø D min	49	59	74	97	122	146	194	243	289	333	381	428	477
ØD1	acc. to EN 1092-1												

1. Check that the distance between the connection flanges corresponds with the overall length of the butterfly valve. Spread flanges with a suitable tool if necessary.
2. Ensure that the valve disc is completely closed.
3. Guide the butterfly valve with sufficient clearance between the two connection flanges.
4. Insert flange gaskets on both sides.
5. Align the valve centrally in the pipeline using 4 flange connection screws.
6. Tighten the screws on both connection flanges in a crosswise pattern until the flange gaskets are pressed evenly and firmly.
7. Carefully and fully open and close the butterfly valve again to ensure that the valve disc can move freely.
8. Single-sided sealing as end-of-line valve (seat ring on the upstream side).
9. Clean and flush the pipeline before the first closing operation of the butterfly valve.

5 Maintenance and repair

Maintenance of the valve seat and the packing can be carried out on-site (for item numbers, see sectional drawing).

5.1 Changing the seat ring

1. Remove the butterfly valve from the line with the valve disc closed.
2. Remove the seat retaining ring (3).
3. Take out the seat ring (6).
4. Carefully clean the sealing edge of the valve disc (2) and the receiving surfaces of the seat ring.
5. Insert the new seat ring with the valve disc closed.
6. Insert and fasten the seat retaining ring.
7. Install the butterfly valve in the pipeline with the valve disc closed, tighten the flange connection screws in a crosswise pattern and wait 15 minutes.
8. The butterfly valve can then be put into operation.

5.2 Changing the gland packing

Before changing the packing, ensure that the valve is depressurised and cannot be pressurised. The packing can be changed without removing the valve from the piping system.

1. Remove the nuts of the gland follower (8), pull up the guide ring (7).
2. Pull out the packing rings (10).
3. Clean the upper valve stem (4) and the packing space.
4. Insert new packing rings.
5. Lower the guide ring and gland follower.
6. Carefully tighten the nuts of the gland follower until the tightness of the gland seal is ensured.

5.3 Cause and rectification of functional malfunctions

If the function of the valve or its operation is faulty, it should be checked whether the assembly and installation of the valve were carried out in accordance with the installation and maintenance instructions described above. The information on material, pressure, temperature and flow direction must be compared with the design and the layout plan of the piping system. Furthermore, check whether the installation and operating conditions correspond with the technical data in the data sheet or on the nameplate.
The safety regulations must always be observed when rectifying a malfunction.

6 Marking

Additional marking on the valve in accordance with EN 19, such as: DN, PN, manufacturer logo. The body material is cast into the body.

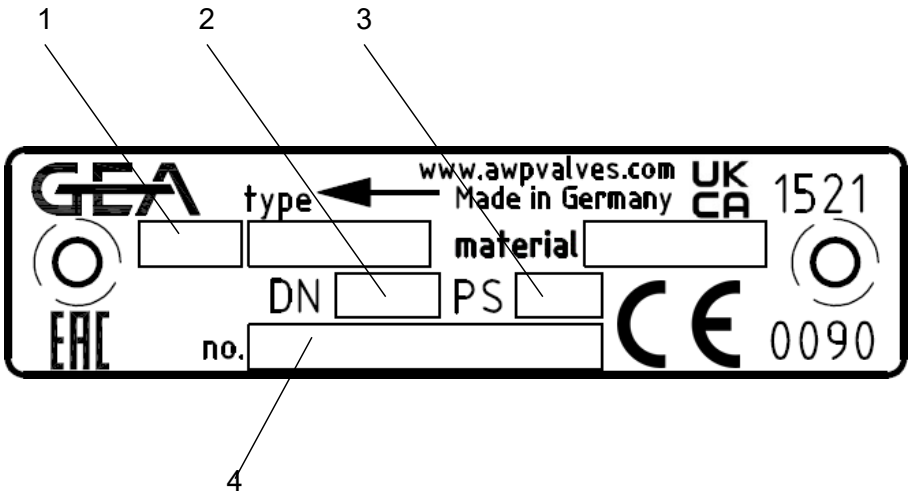

1 Valve type	2 Nominal size
3 Pressure rating	4 Serial number

7 Decommissioning

The removal of the valve for inspection or repair purposes is often carried out negligently, as the valve is being repaired or replaced anyway. It is nevertheless recommended to remove the butterfly valve with care so that the possible cause of damage can be identified and investigated after removal.**WARNING! Risk of injury due to the pumped medium! Before decommissioning, check that the pipeline is depressurised and drained. If corrosive, flammable, aggressive or toxic media were pumped, vent the pipeline.**

- Only task qualified personnel with work on the butterfly valve.
- Always close the butterfly valve completely (the valve disc position is identical to the flat on the upper valve stem).
- First loosen and pull out all flange connection screws so that the valve can be removed from the piping system.

8 Disposal

Send the correctly cleaned valve to a recycling facility. Poorly cleaned valves can cause serious injuries to the skin or other parts of the body. If the butterfly valve is passed on to third parties, the manufacturer assumes no warranty for the safety of the valve.

9 Contact

GEA AWP GmbH
Armaturenstr. 2
17291 Prenzlau
Germany
Tel.: +49 3984 8559-0
Fax: +49 3984 8559-18
info@awpvalves.com
www.awpvalves.com

GEA AWP GmbH
Armaturenstr. 2
17291 Prenzlau
Germany
phone: +49 3984 8559-0
fax: +49 3984 8559-18
e-mail: info@awpvalves.com

Latest revision: 20.11.2026
©All rights reserved. Subject to modifications. Printed in Germany.