

OPERATING INSTRUCTIONS FOR SUCTION FILTERS

SF (550, 560, 569), SFR (551, 562, 570, 572)

GEA Engineering for a better world.

GEA.com

Table of contents

1 Overview of types **4**

2 SF/SFR DN 80 - DN 500 ..... **5**

3 Technical characteristics **5**

3.1 Pressure/temperature operating limits 5

3.2 Operating Mediums 6

3.3 Flow coefficient 6

4 Safety instructions **7**

5 Application **7**

6 Functional description **7**

7 Installation **7**

8 Maintenance **7**

9 Transport, storage and disposal **8**

10 Warranty **9**

11 Spare parts **9**

12 Marking **10**

13 Note on residual hazards in accordance with Pressure Equipment Directive 2014/68/EU **11**

1 Overview of types

550	SF Suction filter without integrated check valve - special version for GEA Refrigeration Germany
560	SF-AVR Suction filter combination (suction filter with shut-off valve) without integrated check valve – special version for GEA Refrigeration Germany
569	SF / SF-AVR Suction filter or suction filter combination (suction filter with shut-off valve) without integrated check valve – standard version
551	SFR Suction filter with integrated check valve and hot gas connection – special version for GEA Refrigeration Germany
562	SFR-AVR Suction filter combination (suction filter with shut-off valve) with integrated check valve – special version for GEA Refrigeration Germany
570	SFR / SFR-AVR Suction filter or suction filter combination (suction filter with shut-off valve) with integrated check valve – standard version
572	SFR / SFR-AVR Suction filter or suction filter combination (suction filter with shut-off valve) with integrated check valve and hot gas connection

2 SF/SFR DN 80 - DN 500

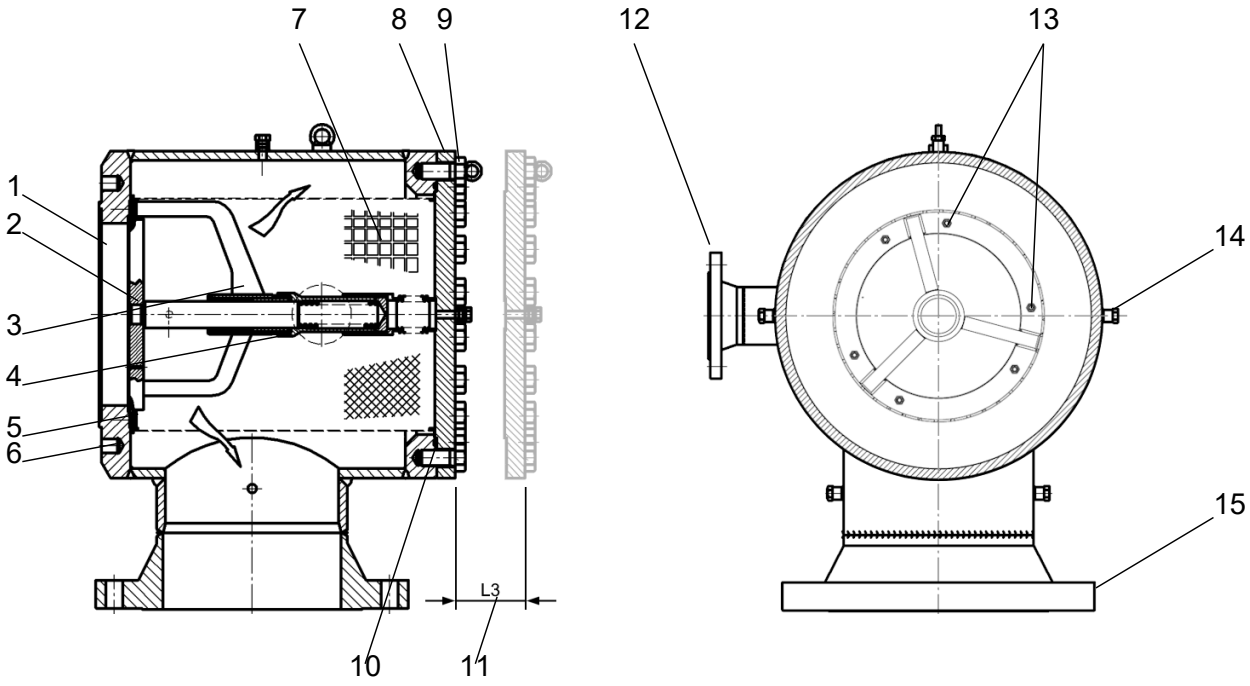

1	Inlet	2	Valve disc, complete (SFR 551, 562, 570, 572 only)
3	Guide bush, complete (SFR 551, 562, 570, 572 only)	4	Compression spring (SFR 551, 562, 570, 572 only)
5	Seat seal (SFR 551, 562, 570, 572 only)	6	Tapped holes for hexagonal bolts
7	Strainer insert	8	Bonnet
9	Bonnet bolts (hexagonal bolts)	10	Bonnet gasket (O-ring)
11	Space required for disassembly of the internal parts	12	Bypass safety valve
13	Fixing screws or nuts guide bush	14	Test connection
15	Outlet to the compressor		

3 Technical characteristics

Body material	Selection acc. to AD-2000 Series W
Steel	P235GH, S235JR, S355J2
Low-temperature steel	P355NL1
Stainless steel	X5CrNi18-10 or equivalent
Mesh size of strainer insert	63 – 500 µm, according to customer request
Strainer material	X5CrNi 18-10

3.1 Pressure/temperature operating limits

When using screws of property class 8.8, the following values apply:

PN	TS (MWT) [°C]	-60[2)]	-40[2)]	-25[2)]	-10	+50	+150
25	PS (MWP) [bar]	6.25	12.5	18.7	25	25	25
40		10	20	30	40	40	40
63		15.75	31.5	47.2	63	63	63

When using screws of property class A2-70, the following values apply:

PN	TS (MWT) [°C]	-60[2)]	-60[1)]	-10	+50	+150
25	PS (MWP) [bar]	18.7	25	25	25	25
40		30	40	40	40	40
63		47.2	63	63	63	63

1) Load case I (low-temperature steel, stainless steel)
2) Load case II (acc. to AD2000-W10) (Steel)
Permissible ambient temperature range: -50 to +50 °C

For suction filters for heat technology (types 55...HT, 56...HT, 57...HT) the following values apply (both for valves with 8.8 and with A2-70 screws):

PN	TB (MWT) [°C]	-10	+50	+200
25	PS (MWP) [bar]	25	25	25
40		40	40	40
63		63	63	63

Permissible ambient temperature range: -50 to +50 °C

3.2 Operating Mediums

Suitable for operation with refrigerants acc. to EN 378 Part 1, e.g. NH3, R22, R134a or mixtures with refrigeration oil, as well as for neutral gaseous and liquid media and glycol-based cooling brine.

3.3 Flow coefficient

K_v-value of the valve at rated stroke (100% opening) in m^3/h

Type	DN 80	DN 100	DN 125	DN 150	DN 200	DN 250	DN 300	DN 350	DN 400	DN 500
560, 569, 550	227	303	435	615	1065	1415	2285	2415	2810	3372
562, 570, 572, 551	182	243	354	491	850	1120	1500	1920	2310	2772

Opening pressure check valve [bar]:0.02 to 0.04 (fully open at 0.1 to 0.15)
Horizontal installation position; the direction of flow must be observed.
Leakage: external: <15 g refrigerant per year, seat leakage: <15 g (at Δp=10 bar above valve disc) refrigerant per year

4 Safety instructions

NOTICE

Danger from improper handling!

Risk of property damage.

- ▶ Do not install filters with transport or storage damage.
- ▶ Filters must be free of axial forces, bending moments, and torsional moments and must not serve as fixed points for pipework.
- ▶ In the event of oxy-fuel welding or brazing, the flame must not touch the filter.
- ▶ Keep the interior of the filters free of contamination.
- ▶ Only change the filter element when the filter housing is depressurised and sufficiently ventilated.

5 Application

AWP suction filters are primarily mounted on the suction connection of the screw compressor units. They protect the compressor from contamination. When the compressor unit is switched off, the integrated check valve prevents the compressor from rotating backwards. Closing of the check valve is supported by a spring and for types 551 and 572 additionally by a hot gas connection.
AWP suction filters are provided with bypasses and test connections according to customer request.

6 Functional description

AWP suction filters are equipped with a replaceable strainer insert made of stainless metal mesh and an integrated check valve (types 551, 562, 570, 572). The check valve is fastened by screws or nuts in the base of the suction filter body. It is maintenance-free. The strainer insert centres itself automatically in the body.
Flow through the strainer is from the inside to the outside.
The integrated check valve opens automatically by the pressure of the medium on the valve disc. It begins to open at a differential pressure of 0.01 to 0.05 bar and is fully open between 0.1 and 0.2 bar. When the flow stops, the check valve closes and thus prevents reverse running of the compressor screw and thus oil loss.

7 Installation

AWP suction filters are primarily mounted between the shut-off valve and the suction connection of the compressor. Provide sufficient space on the bonnet side for disassembling the internal parts (see dimension Ls in **SF/SFR DN 80 - DN 500 [▶ 5]**).

Nominal size	DN80	DN100	DN125	DN150	DN200	DN250	DN300	DN350	DN400	DN500
L3 (mm)	220	275	322	322	374	483	565	565	680	890

The installation position is horizontal. The direction of flow must be observed. When installing the suction filter, ensure that the flange bolts are tightened evenly and crosswise.

8 Maintenance

AWP suction filters operate maintenance-free. The degree of contamination of the strainer insert is evident from the system behaviour. If increased pressure losses occur on the suction side and the refrigeration capacity is not reached at the intended evaporation temperature, take out and clean the strainer insert. To do this, recover the refrigerant from the suction filter body. **NOTICE! Bypass valves must be closed! Ensure the safety valve does not trigger!**

1. Loosen and remove the hexagon screws and remove the bonnet. Wrench sizes:

Suction filter bonnet [DN]	80	100	125	150	200	250	300	350	400	500
Screws	M12	M12	M20	M24	M24	M30	M30	M30	M33	M36

Suction filter bonnet [DN]	80	100	125	150	200	250	300	350	400	500
	ISO 4017									
Tightening torque (8.8) [Nm]	85	85	425	730	730	1450	1450	1450	2000	2600
Tightening torque (A2-70) [Nm]	56	56	275	423	423	845	845	845	900	1200
Wrench size	19	19	30	36	36	46	46	46	50	55

2. Carefully pull out the strainer insert and clean it. **NOTICE! To change the integrated check valve, leave the strainer insert in the body to prevent accidental falling of the screws / nuts.**
3. If necessary, check the degree of contamination of the seat seal (PTFE) in the valve disc. To do this, loosen the fixing screws (up to DN 150) or nuts (from DN 200) of the guide bush. Wrench sizes:

Check valve [DN]	80	100	125	150	200	250	300	350	400	500
Screws	M6	M6	M6	M6						
Nuts					M8	M8	M8	M10	M10	M12
	ISO 4017				ISO 4032					
Tightening torque (8.8) [Nm]	10	10	10	10	25	25	25	49	49	85
Wrench size	10	10	10	10	13	13	13	16	16	19

4. Carefully remove the check valve at the guide bush together with the compression spring and the valve disc.
5. Assembly is carried out in reverse order: first the integrated check valve is installed. To do this, fix the guide bush again with the corresponding fixing screws or nuts on the base of the suction filter. See the previous table for corresponding wrench sizes and tightening torques.
6. Then firmly centre the strainer insert over the integrated check valve in the body.
7. Then replace the O-ring (bonnet seal) with a new one and place it in the groove with a little low-temperature grease (e.g. RENOLIT UNITEMP 2).
8. Then put on the bonnet and tighten the hexagon bolts, evenly and crosswise. See the following table for corresponding wrench sizes and tightening torques:

Suction filter bonnet [DN]	80	100	125	150	200	250	300	350	400	500
Screws	M12	M12	M20	M24	M24	M30	M30	M30	M33	M36
	ISO 4017									
Tightening torque (8.8) [Nm]	85	85	425	730	730	1450	1450	1450	2000	2600
Tightening torque (A2-70) [Nm]	56	56	275	423	423	845	845	845	900	1200
Wrench size	19	19	30	36	36	46	46	46	50	55

9 Transport, storage and disposal

AWP components are transported protected against impact and covered with foil.

- Storage must take place in dry rooms.
- Ensure that the connection ports are sealed intact.
- Contamination of any kind must be kept away from the interior.
- The external surfaces are provided with a corrosion protection coating for dry storage at room temperature, which is effective for at least 1 year.

- The corrosion protection coating CELEROL® Reaktionsgrund 918 is a good adhesion promoter for 1- and 2-component top coats.
- Dismantle for disposal.
- Collect lubricants during dismantling. The materials must be separated from one another and disposed of in accordance with local regulations.

10 Warranty

Unless agreed otherwise, the statutory warranty provisions apply. For further information, please also refer to our General Terms and Conditions, available on our website **awpvalves.com**.

11 Spare parts

Nominal size	Strainer insert[1)]	SFR valve insert	Compression spring		O-ring (CR 70) for bonnet	
			Item number	Dimensions	Item number	Dimensions
DN 80	56901E18.83400X1	57001.18.5110001	562041	1.6 x 26.4 x 85	737507	160 x 5
DN 100	56901E19.83400X1	57001.19.5110001	562039	1.6 x 26.4 x 130	737504	185 x 5
DN 125	56901E21.83400X1	57001.20.5110001	562039	1.6 x 26.4 x 130	737541	240 x 6
DN 150	56901E21.83400X1	57001.21.5110001	562043	2.5 x 46.0 x 136	737548	260 x 6
DN 200	56901E23.83400X1	57001.23.5110001	562007	3.2 x 48.0 x 115	737509	310 x 8
DN 250	56901E24.83400X1	57001.24.5110001	562007	3.2 x 48.0 x 115	737583	380 x 8
DN 300	56901E25.83400X1	57001.25.5110001	562009	3.6 x 48.0 x 160	737603	450 x 8
DN 350	56901E26.83400X1	57001.26.5110001	562009	3.6 x 48.0 x 160	737586	470 x 8
DN 400	56901E27.83400X1	57001.27.5110001	562032	5.0 x 80.0 x 252	737587	530 x 8
DN 500	56901E28.83400X1	57001.28.5110001	562032	5.0 x 80.0 x 252	737589	640 x 10

Mesh size of strainer insert (µm)	[1)] Index X in item number strainer insert
25	B
40	A
63	9
80	8
100	7
120	C
135	6
150	5
200	4

Mesh size of strainer insert (µm)	[1] Index X in item number strainer insert
250	D
500	3

A valve insert contains all components of the integrated check valve, i.e. guide bush, compression spring and valve disc with seat seal. If a different O-ring material than CR is required for the bonnet seal, other spare part numbers apply.
In case of doubt, please contact our Sales Support either via our website awpvalves.com/contact or by email to **info@awpvalves.com**. The most reliable method to correctly identify the required spare part is to send a photo of the nameplate on which the serial number of the valve is clearly visible.

12 Marking

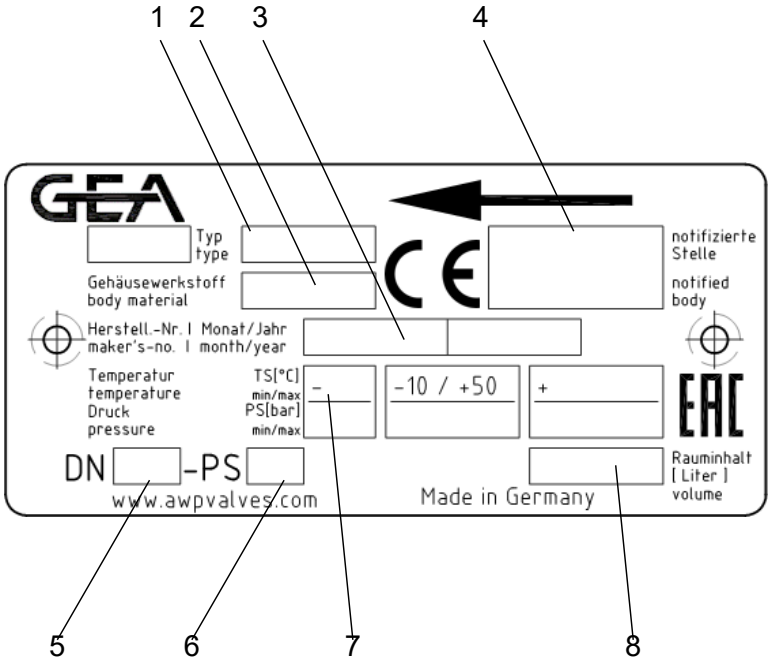

1	Type designation	2	Material number
3	Serial number	4	Flow direction
5	Nominal size (DN)	6	Max. permissible operating pressure (PS)
7	Operating temperature associated with the operating pressure	8	Volume [litres] - content of the pressure vessel

DN	80	100	125	150	200	250	300	350	400	500
Volume (litres)	7	9.5	20	25	40	80	150	160	210	415

13 Note on residual hazards in accordance with Pressure Equipment Directive 2014/68/EU

NOTICE

- Do not loosen the bonnet (without authorisation) during operation or when under internal pressure.
- There may be defects in weld seams that could not be detected in previous inspections.
- Do not incorrectly assemble flange connections (inlet and outlet flanges, bonnets).
- Contamination in the operating medium or improper handling of internal components can lead to damage to gaskets.
- Observe operating limits and manufacturer's instructions in accordance with these operating instructions.

GEA AWP GmbH
Armaturenstr. 2
17291 Prenzlau
Germany
phone: +49 3984 8559-0
fax: +49 3984 8559-18
e-mail: info@awpvalves.com

Latest revision: 17.06.2026
©All rights reserved. Subject to modifications. Printed in Germany.