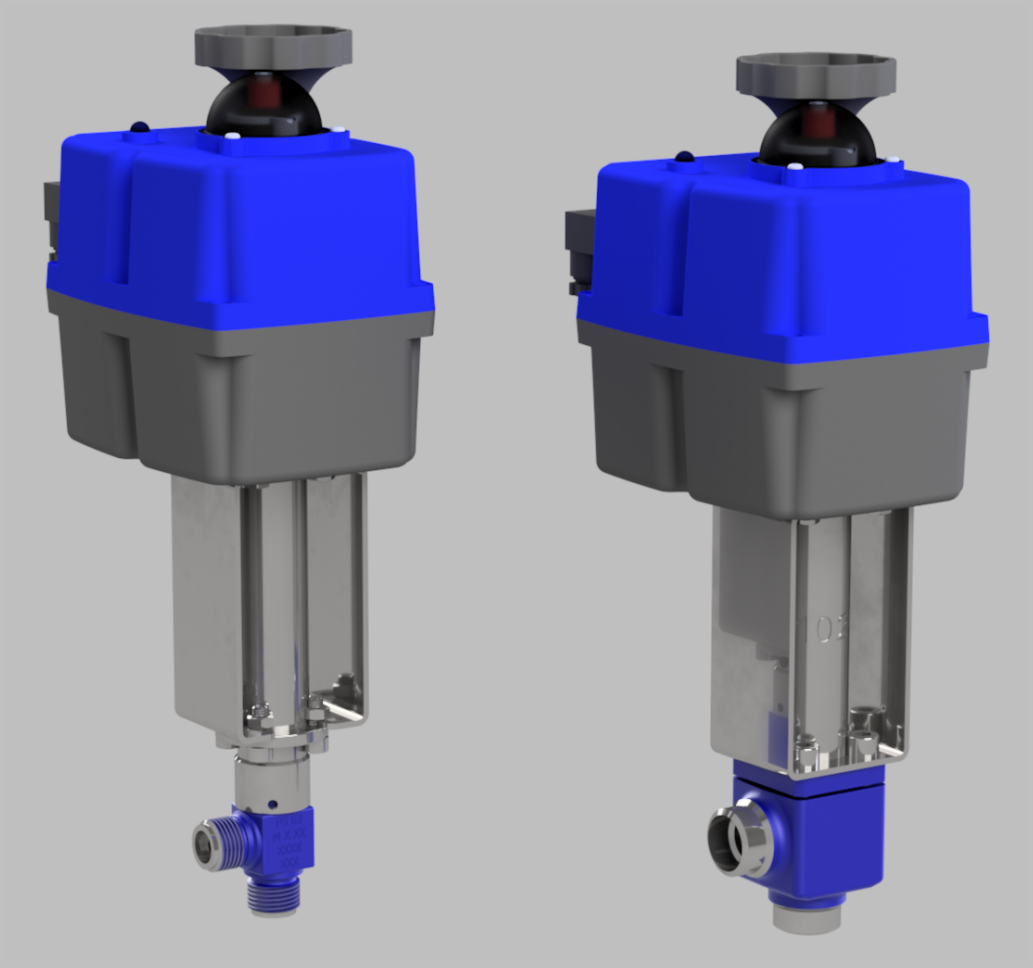

OPERATING INSTRUCTIONS FOR ELECTRIC ACTUATORS

J4M actuator for small valves and service valves

Engineering for a better world.

GEA.com

Table of contents

1 Product description 4
1.1 Functional description 4
1.2 Connection 4
1.3 Maintenance 4
2 Important notes 4
2.1 Notes on project planning 5
2.2 Environment and installation system 5
3 Commissioning / Electrical connection 5
4 Connection plugs 6
5 Adjustment 7
6 OPEN/CLOSED Standard 7
7 DPS positioner (additional flash sequences) 8
8 Overview 9
8.1 Data applicable to all models 9
8.2 Model-specific data 10
8.3 Manual override 10
9 Perform self-adjustment on the actuator 10
10 Mounting instructions for GEA AWP service valve 11
10.1 Overview 11
10.2 Design with bracket and adapter 11
10.3 Direct mounting with reducing sleeve 12
11 Installation of flange adapter 12
12 Assembly instructions GEA AWP small valve 13
12.1 Overview 13
12.2 Design with bracket and adapter 13
13 Mounting the valve under the actuator 13
13.1 Direct mounting with reducing sleeve 13
13.2 Assembly with bridge and service valve adapter 14
13.3 Assembly with bridge and small valve adapter 14
13.4 Perform self-adjustment on the actuator 15
14 Setting the actuator 15
15 Configuration of the function 19
16 Functional test 20

1 Product description

1.1 Functional description

The actuator automatically detects the connected operating voltage. Depending on the control, it moves clockwise or anti-clockwise into its specified end position. While the brushless motor drives the main shaft via the gearbox, the DOME position indicator continuously shows the position of the valve. In addition, the operating status is shown via the multi-colour status LED. To avoid condensation in the body during fluctuations in the outside temperature, the part-turn actuator has an automatic integrated switch compartment heater, which protects the interior when there is a continuous power supply. If the valve is blocked or stiff, the electronic torque limitation protects against damage to the gearbox and motor. In the event of a power failure or emergency intervention, the manual override can be switched on via the selector switch and the rotary actuator can then be adjusted manually via the handwheel.

1.2 Connection

The mechanical connection is made via a standard interface according to DIN 3337 / ISO 5211. For this purpose, the actuator has a multi-flange plate and is available with various stem inserts. The electrical connection is made via industrial connectors (see connection plugs).

1.3 Maintenance

Maintenance work is not required on J+J electric part-turn actuators. Regular functional testing is advisable in accordance with the safety requirements of the system, especially for rarely used actuators.

2 Important notes

⚠ DANGER

Danger from electrical voltage!

During the operation of electrical devices, certain parts of these devices are inevitably under dangerous voltage. Non-observance of the general electrical safety rules can therefore lead to serious physical injury or property damage. .

- ▶ Only appropriately qualified personnel may work on or near these devices.
- ▶ The personnel must be familiar with all safety instructions and maintenance measures in accordance with these operating instructions.

NOTICE

Observe the operating manual!

The operating manual must be read carefully and completely before installation. For special models, the supplied supplementary manual always applies in addition

NOTICE

Trouble-free and safe operation of the devices requires proper transport, professional storage, setup and assembly as well as careful operation and maintenance.

2.1 Notes on project planning

Before using the electric part-turn actuator, all circumstances regarding the connection, valve and environment must be clarified. Otherwise, long-term damage or functional failure may occur.

2.2 Environment and installation system

J+J actuators must not be installed inverted (flange facing upwards). Accessibility of the manual override and visibility of the position indicator and status LED must always be ensured. For applications with vibrations in the pipeline, expansion joints must be provided. If actuators are used outdoors, sufficient protection (canopy) against climatic influences must be provided. Strong sunlight can damage the actuator due to heat build-up and UV radiation. Icing of the actuator can lead to the manual override becoming unusable. To avoid condensation, the switch compartment heater must always be active (see electrical connection).

3 Commissioning / Electrical connection

The connection must only be carried out by trained electrical specialist personnel. The general electrical safety rules and VDE regulations apply.
The connection is made using the supplied industrial connectors. When wiring, particular attention must be paid to the correct cable diameter and the plug seals, otherwise the IP67 protection class is not guaranteed. Each plug is fastened to the part-turn actuator with a screw; this must not be overtightened. J+J part-turn actuators are to be connected single-phase and must be controlled via relays or switches. Three different circuit methods are available for control as required, without reconfiguration. An external fuse with the corresponding triggering characteristic for increased starting currents (e.g. circuit breaker type D) must be provided. Switching contacts should be suitable for capacitive loads. **NOTICE! No external consumers may be connected in parallel to the actuator!**

4 Connection plugs

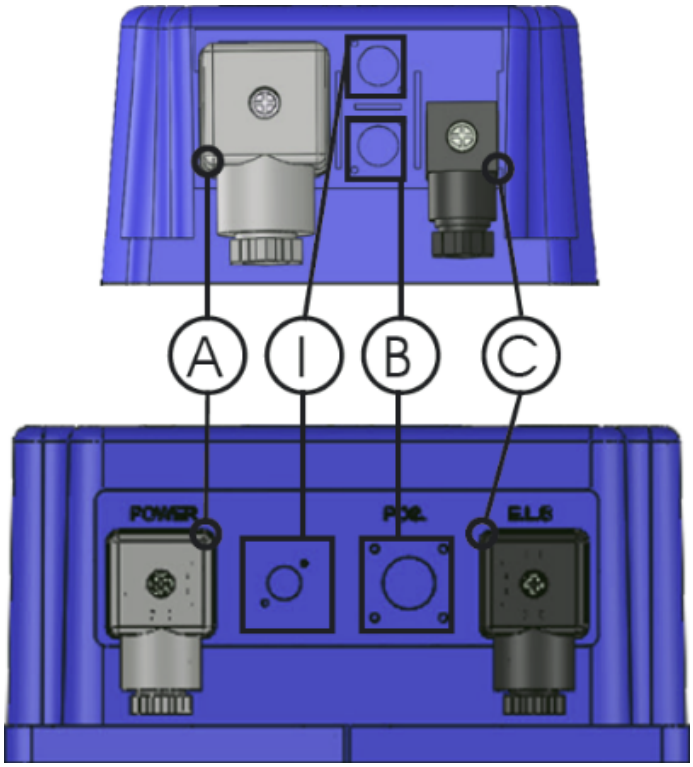

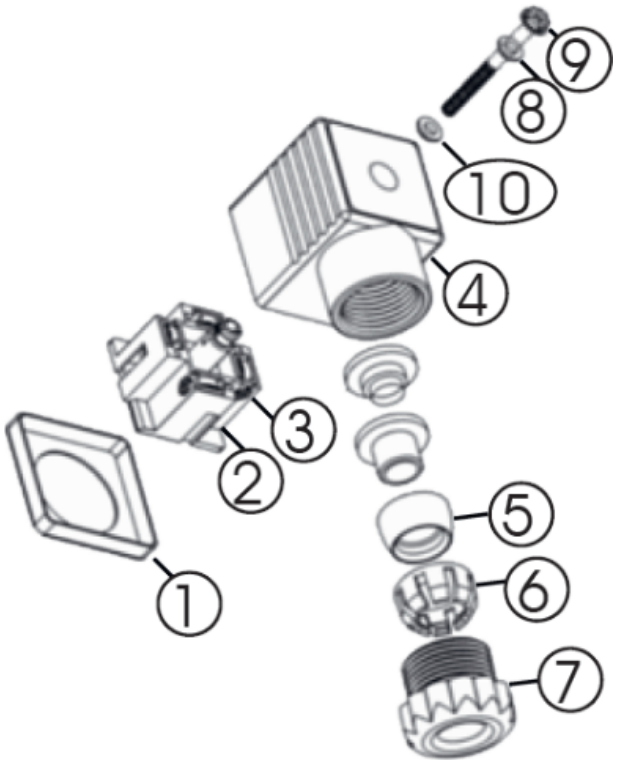

	Large plug	Small plug
Permissible cable diameter	8 mm - 10.5 mm	5 mm - 6 mm
Type	DIN EN175301-803 form A	Industrial connector form C

A	Supply plug
B	Option DPS

A	Supply plug
C	End positions
I	Optional
1	Seal
2	Terminal block
3	Terminal
4	Body
5	Sealing ring
6	Clamping ring
7	Threaded sleeve
8	Washer
9	Fixing screw
10	Sealing ring

5 Adjustment

To set the actuator to the mounted valve, a self-adjustment must be carried out. In this process, the actuator starts in the open position and moves in the closed direction until the set cut-off torque of the valve is reached. The cut-off torque is stored in the actuator via software or app.

✓ Ensure that the actuator is fully open (if necessary, move it electrically to the open position).

✓ Ensure that the valve is open (if necessary, open manually and turn back slightly).

1. Mount the valve under the actuator. If necessary, turn the valve stem slightly in the closed direction to insert the stem insert.
2. Perform self-adjustment as follows.

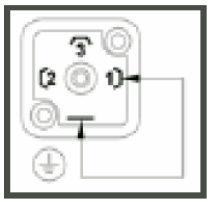

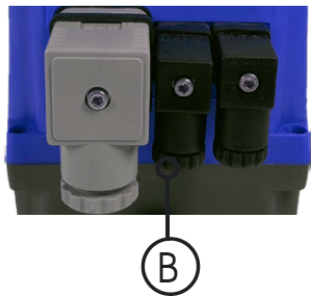

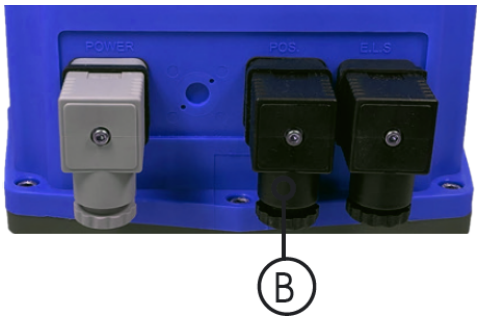

3. Bridge Pin 1 + Earth (Plug B).
4. Switch on voltage and remove bracket.
5. Actuator performs self-adjustment.

6 OPEN/CLOSED Standard

Betriebszustand	Blinktakt der LED
A	
B	
C	
D	
E	
F	
G	
H	
I	

Operating state	
A	Without power supply
B	Actuator is in the open position
C	Actuator is in the closed position
D	Actuator is in the stop position
E	Actuator moves in the Open direction
F	Actuator moves in the Closed direction
G	Torque protection circuit active in the Open direction
H	Torque protection circuit active in the Closed direction
I	Manual override switched on, motor has been stopped

Supply (A) Open/Closed	Supply (A) Open/Closed/ Stop	End positions (C)	Internal end positions
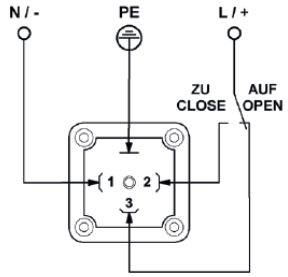	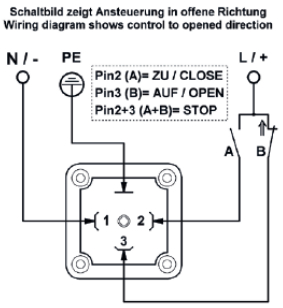	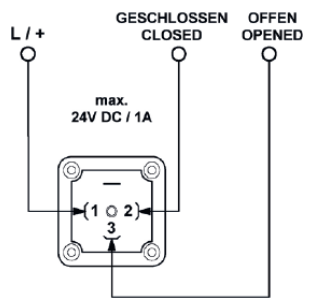	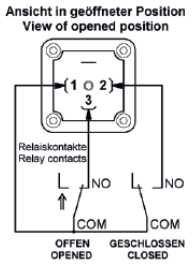

7 DPS positioner (additional flash sequences)

Betriebszustand	Blinktakt der LED
A	
B	
C	
D	
E	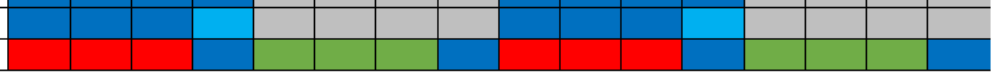
F	

Operating state			
A		Actuator is at the setpoint position	
B		Actuator moves in the Open direction	
C		Actuator moves in the Closed direction	
D		Actuator moves without input signal (4-20mA or 1-10V)	
E		Input signal above signal range (>20mA or >10V)	
F		Self-adjustment	
Supply (A)	DPS (B)	End positions (C)	Internal end positions

Operating state			
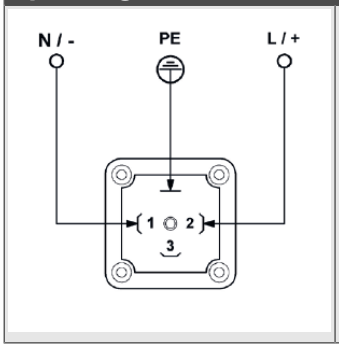	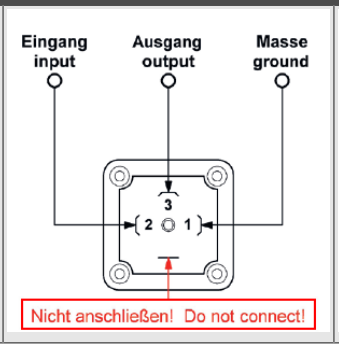	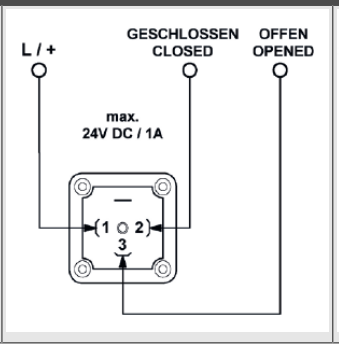	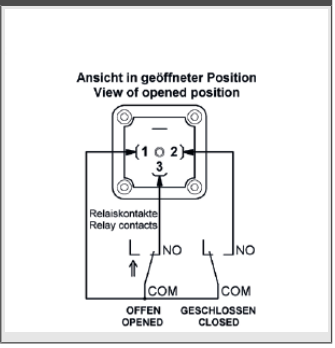

8 Overview

J4M S2 / S6 / S10	J4M S25 / S40
	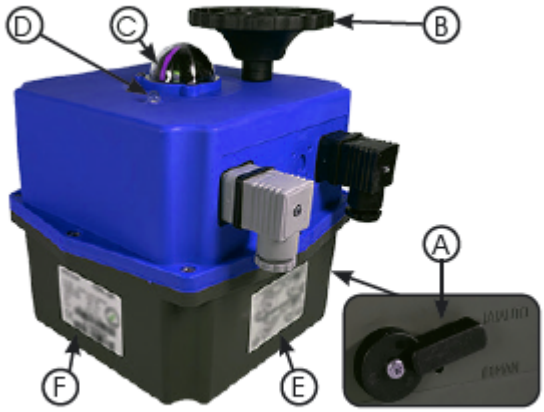
A	Manual override selector switch
B	Handwheel
C	DOME position indicator
D	Status LED
E	Wiring diagram
F	Nameplate

8.1 Data applicable to all models

Duty cycle	Temp. range	Heater power	Protection class IEC60529	Max. rotations
ED = 75%	-20 °C – +70 °C	3.5 W	IP 67	13.5

8.2 Model-specific data

Model	Minimum torque [in Nm]	Maximum torque [in Nm]	Running time without load [in seconds] s/360° ± 10%	Current consumption at max. torque Voltage range: 24-240V DC/AC(50/60 Hz) (-0%/+5%)				Weight
				24V AC	24V AC	110V AC	230V AC	
S2	2	5.5	4	1.8A 43.1W	1.28A 30.7W	0.35A 38.5W	0.23A 56.0W	1.9
S6	5	9	3	2.25A 54.1W	1.66A 39.3W	0.45A 49.6W	0.28A 68.1W	1.9
S10	7	15	12.8	2.41A 57.9W	1.70A 40.8W	0.44A 47.9W	0.28A 68.1W	1.9
S25	10	30	9.3	4.58A 110.0W	3.53A 84.7W	1.03A 113.5W	0.77A 185.3W	3.8
S40	16	50	12	5.43A 130.4W	3.87A 92.8W	1.19A 130.9W	0.84A 202.8W	3.8

8.3 Manual override

All J4M models have a manual override gearbox for manual operation in the event of a power failure. To activate the manual override, the "AUTO-MAN" selector switch (A) is set to "MAN". This decouples the motor from the gearbox. The actuator can now be rotated using the handwheel (B). After approximately four times the running time, the motor is automatically stopped by the electronics. If the actuator is to be put back into operation after manual operation, the selector switch (A) must first be switched to the "AUTO" position. The motor is now coupled again. If the motor has switched off automatically, it can be reactivated either by controlling the other direction or by a brief power interruption (unplugging the supply plug). **CAUTION! The selector switch must not be rotated beyond its specified switching positions. If switching is stiff, the gearbox can be synchronised using the handwheel. The screw of the selector switch must never be loosened!**

9 Perform self-adjustment on the actuator

To set the actuator to the mounted valve, a self-adjustment must be carried out. In this process, the actuator starts in the open position and moves in the closed direction until the set cut-off torque of the valve is reached.

External self-adjustment

1. Bridge Pin 1 + Earth (plug B)
2. Switch on supply voltage.
3. Remove bracket.
   ⇨ Actuator performs self-adjustment

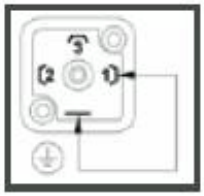

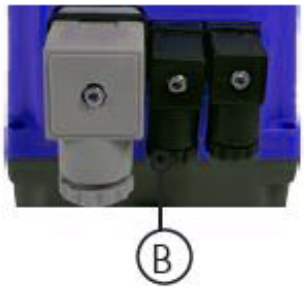

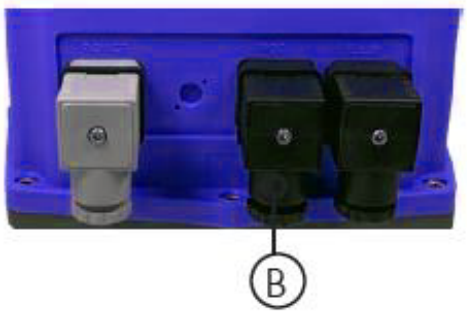

10 Mounting instructions for GEA AWP service valve

10.1 Overview

In these mounting instructions, the parts to be used are discussed in the form of a parts overview, as is the correct assembly of the individual components with corresponding notes through to mounting on the actuator. Two versions are available (design with bracket and adapter or direct mounting with reduction sleeve), as can be seen in the illustrations.

10.2 Design with bracket and adapter

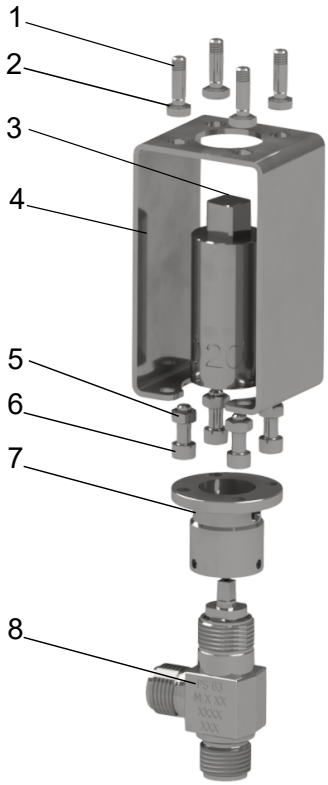



1	4x grub screw M5 x 20 mm (recommended)	2	4x nut M5 with serrated lock washer (recommended)
3	1x adapter square 14 mm to square 6 mm	4	1x bracket (Art. No. BKF0305)
5	4x socket head cap screw M5x16 mm (recommended)	6	4x nut M5 with serrated lock washer (recommended)
7	1x flange adapter for GEA AWP service valve	8	1x service valve GEA AWP (HRS)

10.3 Direct mounting with reducing sleeve

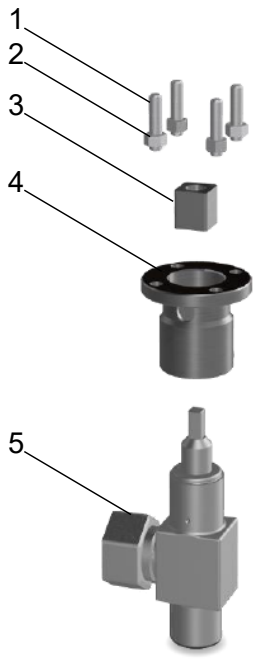



1	4x grub screw M5 x 20 mm (recommended)	2	4x nut M5 with serrated lock washer (required)
3	1x adapter square 14 mm to square 6 mm	4	1x flange adapter for GEA AWP service valve
5	1x service valve GEA AWP (HRS)		

11 Installation of flange adapter

1. Place the flange ring onto the valve so that the flange with the holes in it is at the top.
2. Align the stacked components so that the valve body is parallel to the flange holes.
3. At the points where the screws meet, make a centring hole on the valve so that the screw can lock into it and the flange ring is thus secured against rotation.
4. Then insert screws laterally into the flange ring so that the screws sit in the centring hole when tightened.

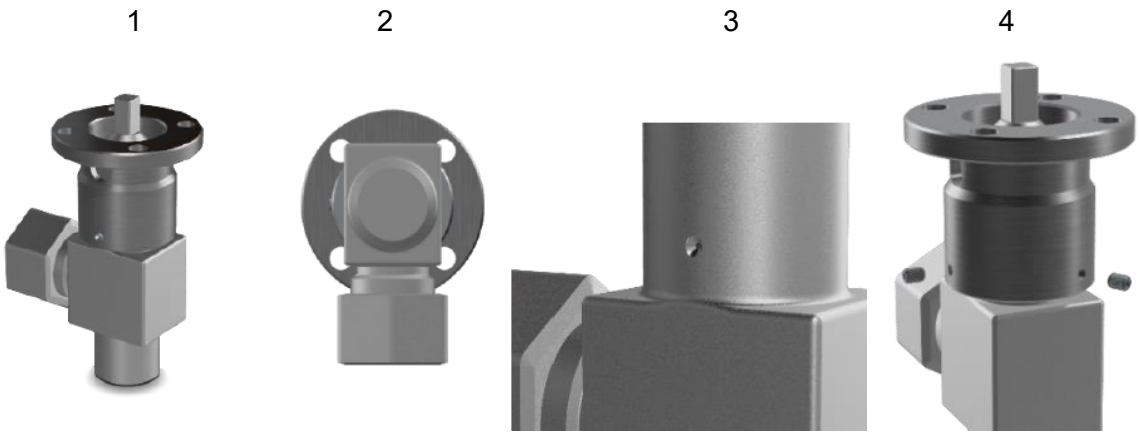

12 Assembly instructions GEA AWP small valve

12.1 Overview

In these mounting instructions, the parts to be used are discussed in the form of a parts overview, as is the correct assembly of the individual components with corresponding notes through to mounting on the actuator. One version is available here (assembly with bridge), as shown in the illustrations.

12.2 Design with bracket and adapter

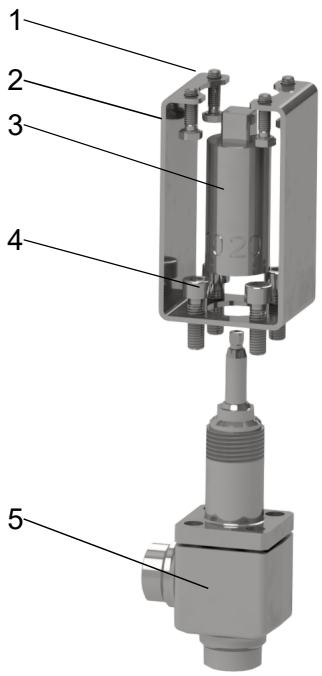

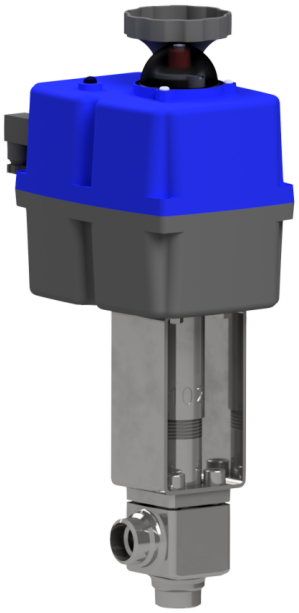

1	4x hexagon screw M5 x 20 mm (recommended)	2	1x bracket (Art. No. BKF0305)
3	1x adapter square 14 mm to square 6 mm	4	4x socket head cap screw M5x16mm
5	1x small valve GEA AWP		

13 Mounting the valve under the actuator

The actuator is delivered in the open position. Before mounting the actuator, the valve must be completely opened. During mounting, the valve stem is turned slightly in the closed direction until it can be inserted into the double square of the actuator.

13.1 Direct mounting with reducing sleeve

1. Place the reduction sleeve for direct mounting onto the square of the service valve so that the round hole in the sleeve is at the top.
2. Finally, tighten the valve with the sleeve fitted to the flange plate of the actuator using the screws.

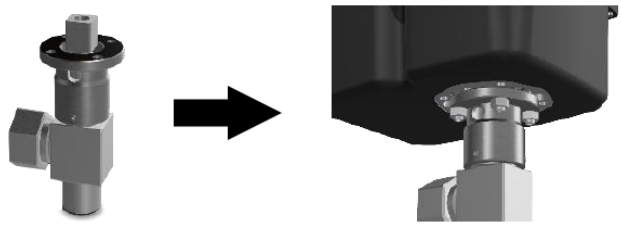

13.2 Assembly with bridge and service valve adapter

1. Mount the bracket with the side of the recess on the flange ring. Now place the adapter with the female square onto the square of the service valve.
2. Finally, tighten the valve with the mounted bracket and adapter to the flange plate of the actuator using the screws.

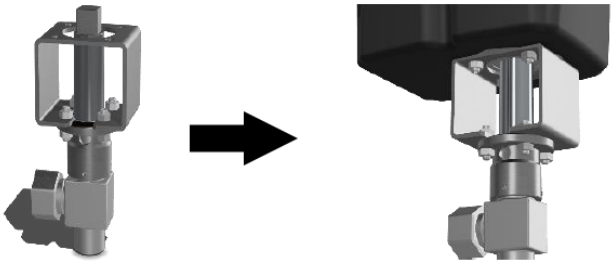

13.3 Assembly with bridge and small valve adapter

1. Mount bridge onto the flange ring with the side without notch facing it. Now place the adapter with the female square onto the square of the service valve.
2. Finally, tighten the valve with the mounted bracket and adapter to the flange plate of the actuator using the screws.

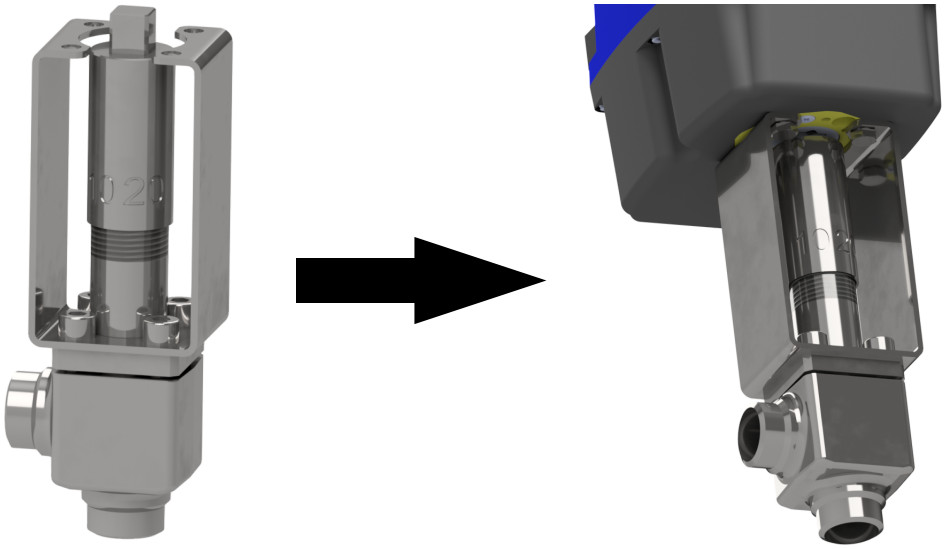

13.4 Perform self-adjustment on the actuator

To set the actuator to the mounted valve, a self-adjustment must be carried out. In this process, the actuator starts in the open position and moves in the closed direction until the set cut-off torque of the valve is reached.

External self-adjustment

1. Bridge Pin 1 + Earth (plug B)
2. Switch on supply voltage.
3. Remove bracket.
   ⇨ Actuator performs self-adjustment

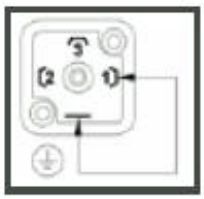

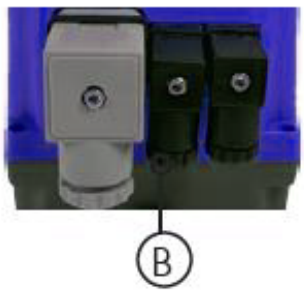

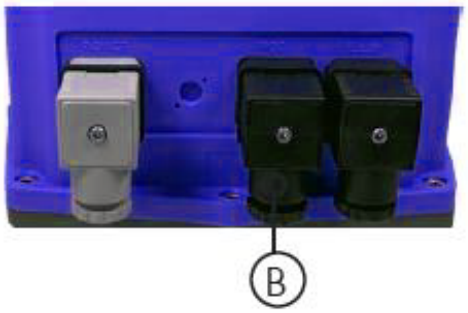

14 Setting the actuator

The mounted actuator is now set for the valve. For this, the J+J Interface Software is required. The actuator is supplied with voltage and must be controlled in the open direction. System requirements: Windows 10/11 64 bit with Bluetooth interface.

Link to software download:
https://juj-deutschland.de/download/3175/software/150170/j4c-j4m-interface-software.rar?lang=de

1. Select Bluetooth.

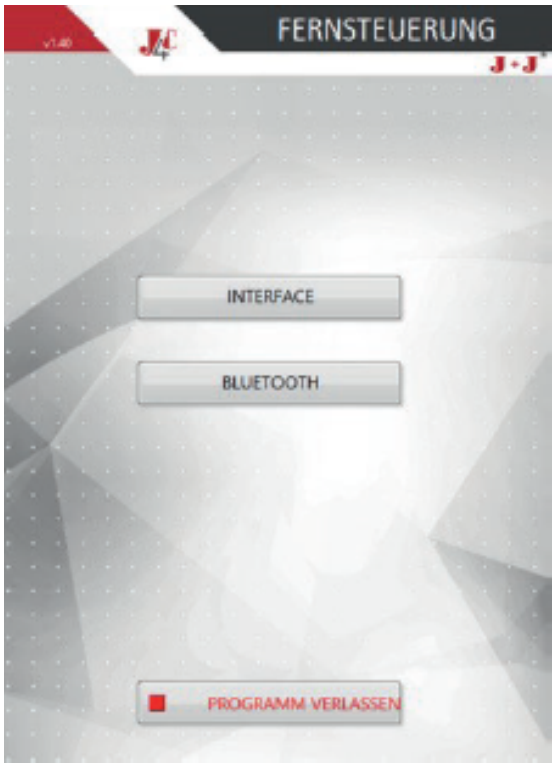

2. Select actuator, enter passwords if necessary.



3. Multiturn configuration.



4. Select diaphragm.



5. Select number of closing attempts and LED configuration.
   Number of closing attempts: If the actuator encounters increased resistance before reaching the closed position, it will open again slightly so that any solids in the valve can loosen. It then attempts to close again. For a medium with many solids, a correspondingly higher value can be selected.

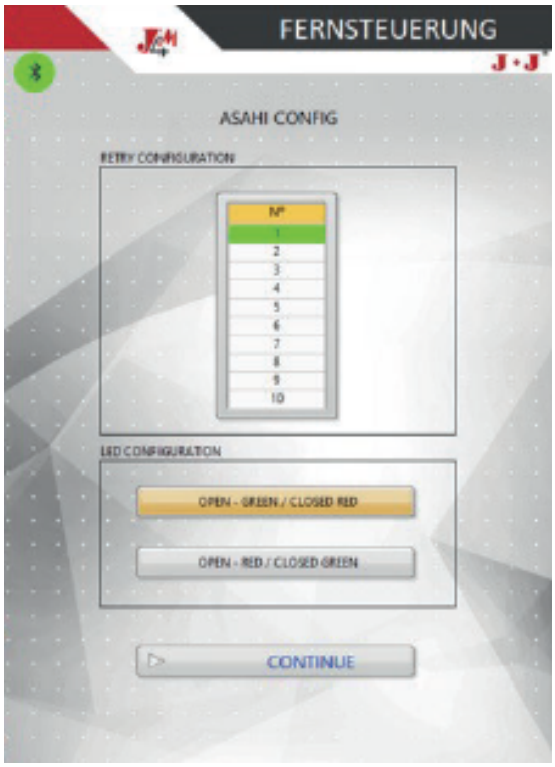

6. Select required closing torque.
   The closing torque indicates the maximum torque required to close the valve. This torque depends on the operating pressure as well as the material of the diaphragm and can be found in the corresponding torque lists. Since the valve can exhibit different properties at different temperatures, self-adjustment should always be performed at room temperature.

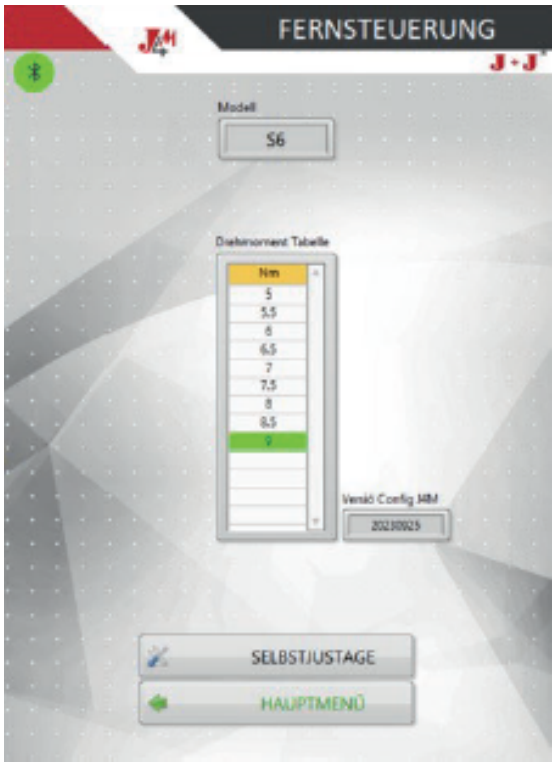

Maximum closing torques for AWP valves

Nominal diameter of the shut-off or control valve (DN)	Maximum closing torque

	PN 25	PN 40	PN 63
6–15	3.3 Nm		
20	4.4 Nm		
25–32	4.7 NM	7.5 Nm	13.2 Nm
40–50	13 Nm	20.8 Nm	35.2 Nm
65	20.1 Nm	32.1 Nm	52.8 Nm

7. Perform self-adjustment.
   During self-adjustment, the software first checks whether the actuator is in the open position. It must then be confirmed that the selector switch of the manual override is set to "AUTO" and the actuator has been mounted on the valve. Self-adjustment is now performed automatically. The software transfers the set parameters to the actuator and then starts the closing movement. As soon as the actuator reaches the set torque, it switches off and stores the closed position. After self-adjustment, you can return to the main menu. The actuator is closed after self-adjustment.

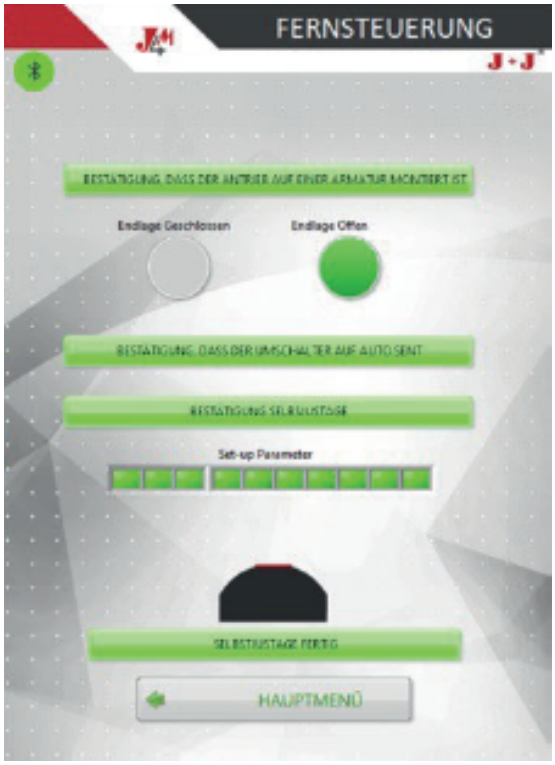



15 Configuration of the function

1. Select DPS.
   The actuator can be delivered with the Open-Close function or DPS positioner. The control can be adjusted accordingly later via the software. In "Open-Close" operating mode, the actual position of the actuator can always optionally be monitored via an output signal. The "Input/Output" and "Stop without signal" operating modes can be selected for the function of a positioner and only differ in the event of a signal failure.



2. Configure control.

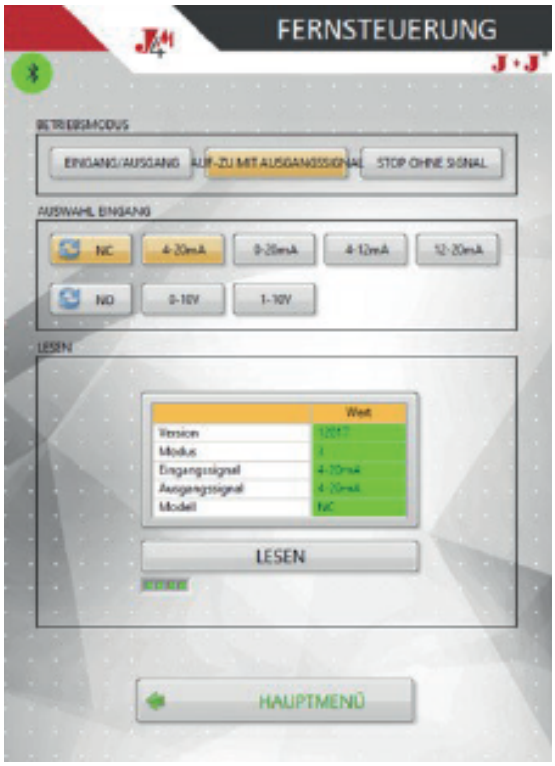

16 Functional test

Select remote control	Depending on the configured function, the actuator can be tested via the software.
Open-Close	Control via "Open", "Close", "Stop" buttons
DPS positioner	Control via "DPS Position"

Feedback	Position feedback of end positions via "Logic Closed" and "Logic Opened"
Actual position in % via "FB" display	



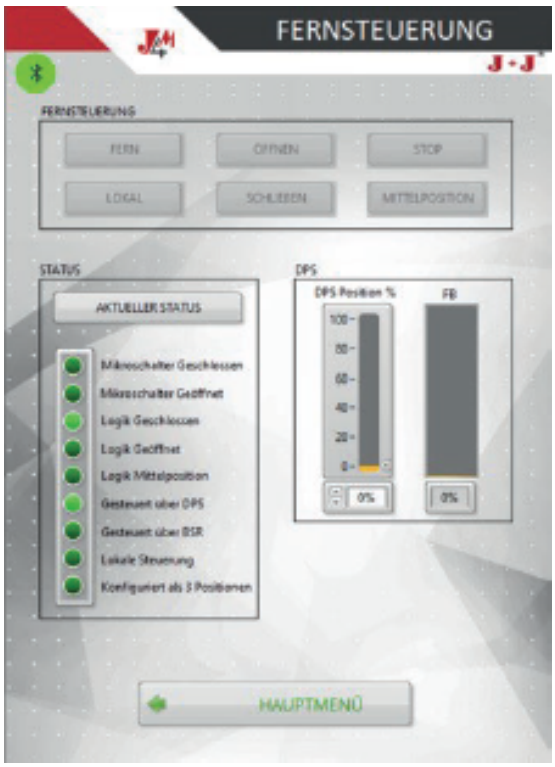

GEA AWP GmbH
Armaturenstr. 2
17291 Prenzlau
Germany
phone: +49 3984 8559-0
fax: +49 3984 8559-18
e-mail: info@awpvalves.com

Latest revision: 27.10.2026
©All rights reserved. Subject to modifications. Printed in Germany.